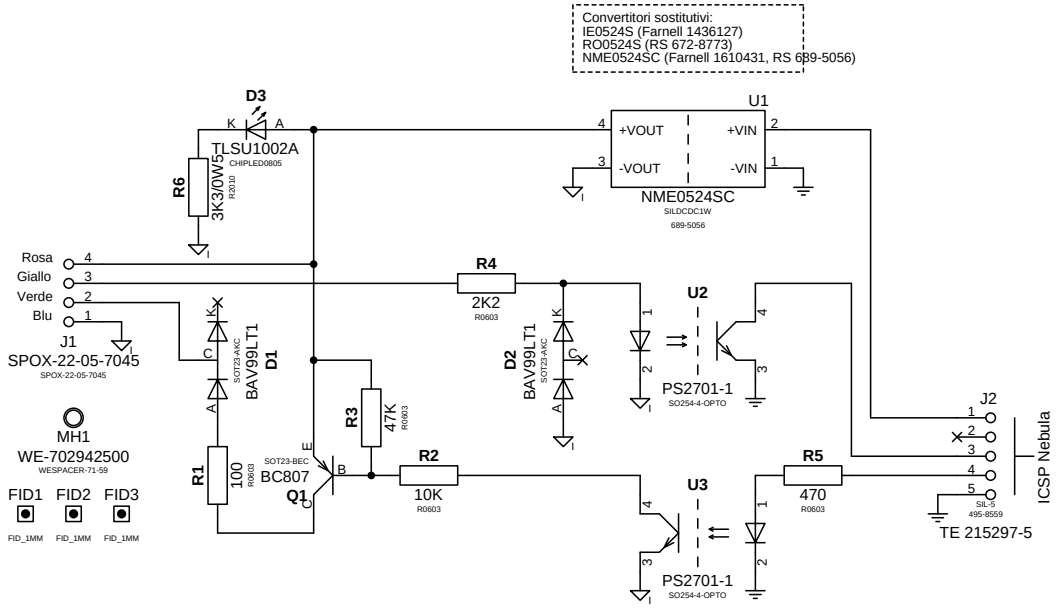

Logos Srl		
File: nebula-opto.sch		
Sheet: /		
Title: LGS-NEBULA-OPTO - Telecomando isolato NEBULA		
Size: A4	Date: 2 maggio 2012	Rev: 2
KiCad E.D.A.		Id: 1/1